matev GmbH
Nürnberger Str. 50
90579 Langenzenn
T +49 9101 9087 -0
F +49 9101 9087 -20
info@matev.eu
www.matev.eu

matev

Operating manual

Front Power System and Front PTO shaft
FPS – JD – 3R

for John Deere, type 3033R, 3038R, 3045R, 3046R

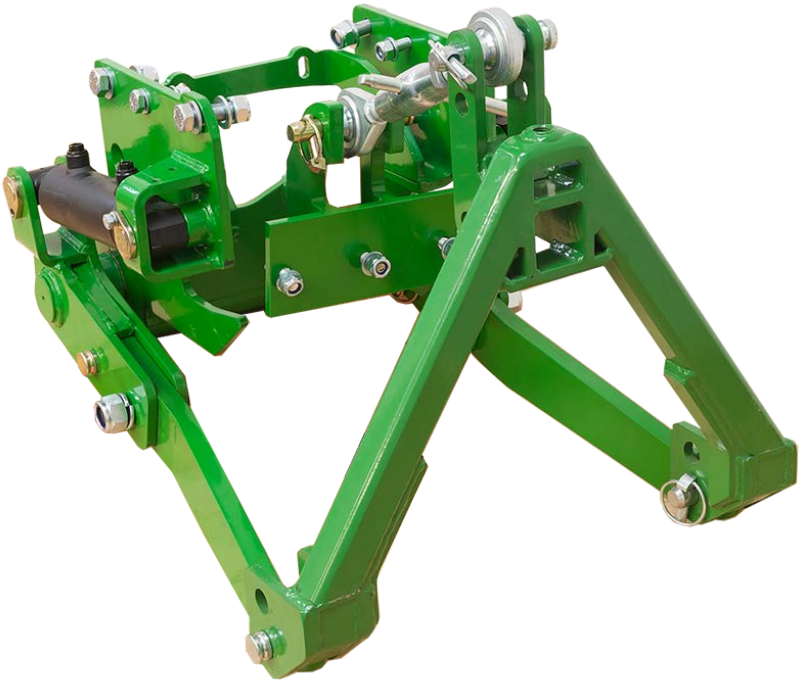

Version: 06/2020

Table of contents

1 About this operating manual ... 3

2 Safety ... 4
2.1 Intended use ... 4
2.2 Qualifications of personnel ... 4
2.3 General safety notices ... 5
2.4 Special safety notices ... 5

3 Installation ... 7
3.1 Mounting the front power system ... 7
3.2 Mounting the lift arms ... 14
3.3 Mounting the hydraulic extension kit ... 14
3.4 Mounting the front PTO shaft ... 15
3.4.1 Front PTO shaft, long version ... 15
3.4.2 Front PTO shaft, short version ... 16
3.5 Frame trussing ... 18
3.6 Pressure accumulator ... 19
3.7 Rear hydraulics extension kit ... 19
3.8 Lay-out rear hydraulic lines from rear to front ... 19
3.9 Hose holder ... 20
3.10 Automotive traction drive ... 20

4 Operation ... 21
4.1 Coupling triangle ... 21
4.2 Coupling and uncoupling implements ... 23
4.3 Lowering safeguard for the front power system ... 23

5 Maintenance ... 24
5.2 General information ... 24
5.3 Service ... 24
5.4 Repair ... 24

6 Disposal ... 25

7 Guarantee ... 25

8 Technical data ... 25

9 List of illustrations ... 26

10 EC Declaration of Conformity ... 27

1 About this operating manual

Dear customer! Dear customer!

Thank you for purchasing this implement, we appreciate your trust.

Prior to using this implement for the first time, read this operating manual carefully and conscientiously all the way through.

Keep this operating manual where it is easily accessible. This will enable you to refer to important information and handling instructions as needed.

Listings with bullet points are marked as follows:

- Text
- Text
- Text

Handling instructions are marked in the sequence in which they should be executed, as follows:

1. Text
2. Text
3. Text

This implement is subject to change in the interest of technical progress. All information, illustrations, and technical specifications represent the latest status at the time this manual was published. The manufacturer reserves the right to make changes at any time in the interest of technical progress.

2 Safety

Guidelines and instructions with which you must comply, are summarized in this section.

Personnel who install, operate and maintain the implements, must have read and understood this operating manual.

2.1 Intended use

The implements should only be mounted on tractors as specified on the cover sheet. The front power system is used to accommodate small to medium-sized implements, such as snow blades, sweepers, etc. The front PTO shaft extends the mid-mount PTO shaft of the tractor to the front. It is used to power sweepers, or similar implements that are driven with PTO shafts.

Attention!
The front power system should not be charged with downward pressure via the tractor's hydraulic system! For implements that contact the ground or roll on the ground in operation, the tractor hydraulic system must be switched to the float setting! Strictly comply with the manufacturer's recommendation!

The front power system is not suitable for lifting people or for use as a work platform!

All other uses are excluded.

Non-intended use causes:

- Health hazards for the operator or for third parties
- Damage to the tractor and the implements
- Environmental damage

2.2 Qualifications of personnel

Only persons 18 years of age or older, or instructed persons should install, operate, and maintain the implements. The operator must have read and understood this operating manual.

2.3 General safety notices

General safety instructions are explained in this section. These safety instructions are used in the subsequent chapters. In addition to the safety aspect, you will save money and work time if you follow these safety instructions.

Danger!
Severe injury to the operator or third parties occurs.
Comply with the safety notice.

Attention!
Minor injury to the operator or third parties can occur. The tractor, the grass collection device or the environment can be damaged.
Comply with the safety notice.

Note!
Important, helpful tips or information for the operator.
Read this note. It facilitates your work.

Attention!
Injuries can occur.
Wear protective work clothing.

2.4 Special safety notices

The safety instructions specified in this chapter are also affixed as stickers on the implements.

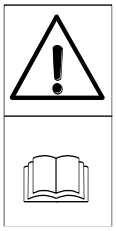

Attention!
Injuries can occur due to improper operation. The implement can be damaged.
Read the operating manual all the way through.
Comply with the safety instructions.

Attention!
Injuries due to fluid escaping under high pressure.
Comply with the notice in the operating manual.

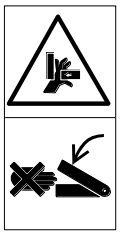

Attention!
Danger of crushing due to moving parts.
Never reach into the crushing hazard danger zone if parts are moving or can move.
Comply with the notice in the operating manual.

Attention!
Increased risk of accident due to rotating PTO shaft.
Do not enter the work area of the PTO shaft when it is rotating.
For your own safety do not wear any loose clothing, belts, or any other loose items. Switch off the implement. Wait until all machine parts have come to a standstill before converting or servicing the implement.

Attention!
Danger of injury due to moving parts.
Remove the ignition key before performing maintenance tasks on the implement.

Attention!
Check all threaded unions prior to using the implement and after using the implement. Loosened connections must be re-tightened.
Damage can occur.

3 Installation

Danger!
Severe injury to the operator or third parties occurs.
Switch off the tractor and remove the ignition key before mounting or dismounting the implements.

Note!
Enter the chassis number of the front power system in section 5.4 of this operating manual.

3.1 Mounting the front power system

If front power lifter and engine PTO shaft are installed, first change to the separate installation manual for installation of the engine PTO shaft.

A conversion kit is necessary for the engine PTO shaft and the front power system! See the installation manual for the engine PTO shaft.

Attention!
Never open the gearbox on your own.
Opening the gearbox invalidates the guarantee.

If there are faults, problems, or other indications of malfunction, contact your sales consultant or contact matev GmbH directly.

Start – installation of the front power system

1. It is necessary to remove the front parts and the side parts of the engine hood to facilitate mounting.
2. Remove the holder for front weights from the frame.
3. Drill out the two rear bores to Ø 16.5. (Fig.)

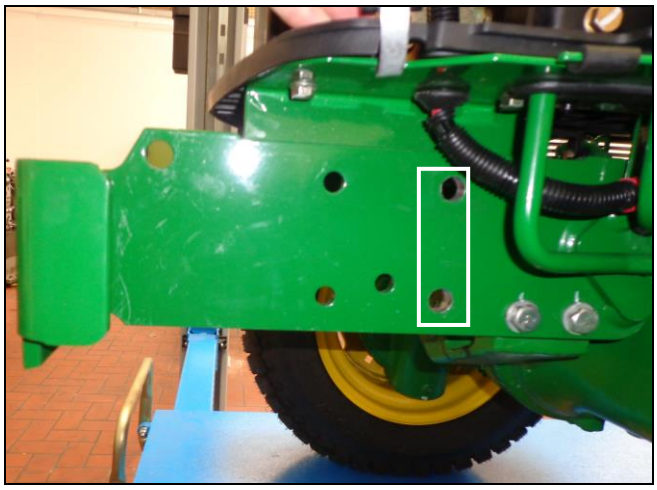

Fig. 1: Drill out the rear bores

4. Position the front power system correctly relative to the tractor.

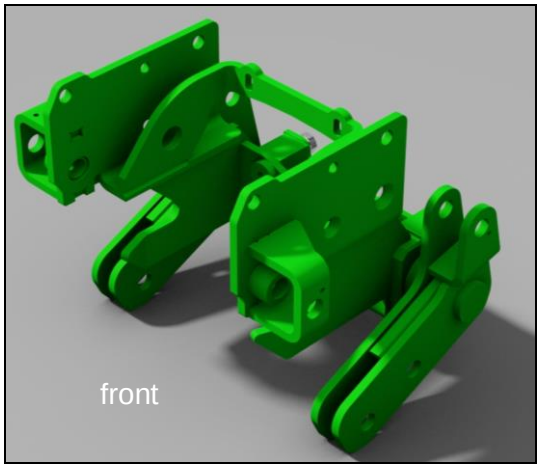

Fig. 2: Position of the front power system

5. From below, slide the front power system over the tractor flame.

6. Bolt the front power system to the tractor frame on both sides with the provided bolts.

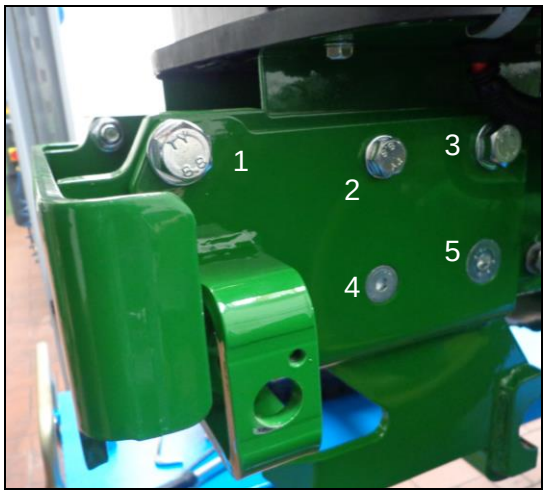

Fig. 3: Front power system bolted to frame

<u>on each side</u>

Item 1:	1 x hexagon screw M16x50 2 x washer 1 x nut, self-locking	Item 2:	1 x hexagon screw M12x45 2x washer 1 x nut, self-locking
Item 3:	1 x hexagon screw M16x50 2 x washer 1 x nut, self-locking	Item 4:	1 x countersunk head screw M12x40 1 x washer 1 x nut, self-locking
Item 5:	1 x countersunk head screw M16x50 1 x washer 1 x nut, self-locking		

7. Now hook the two cylinders into the frame and the lift shackle and fasten it with the provided bolt.

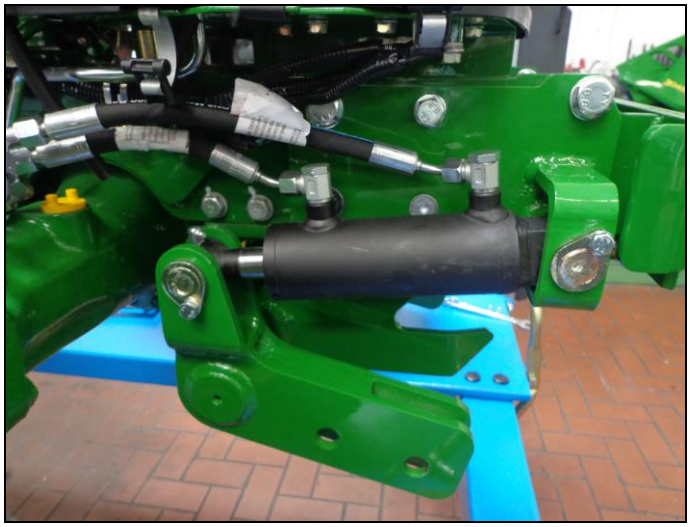

Fig. 4: Cylinder in installed status

Allocation of the hoses

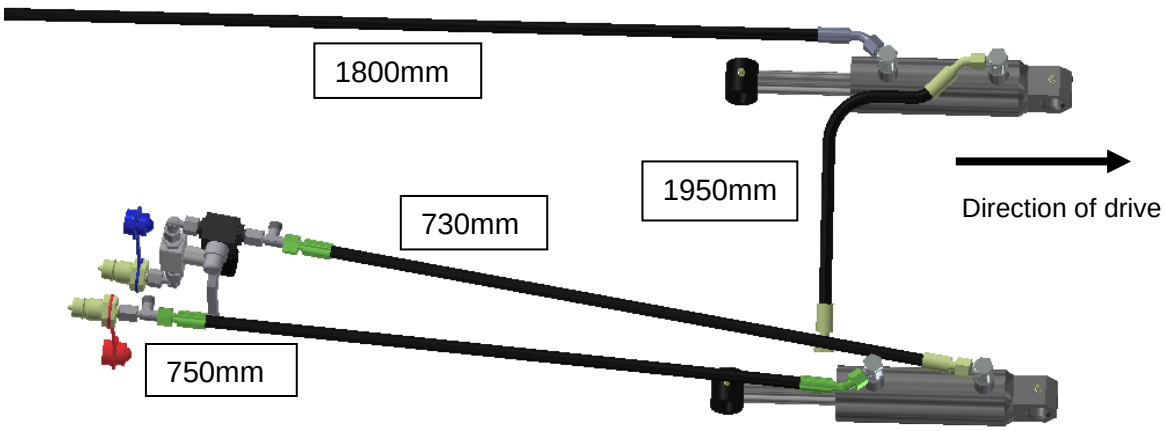

Fig. 5: Hose assignment

Attention!
Connect the hydraulic lines in such a manner that the lines coming from the stop valve are connected to the bottom of the cylinders.

8. Hook in the second cylinder and guide the hoses behind and along the existing hydraulic pipes, until you are at the height between the hydraulic pump and starter. At this point, pull the hoses diagonally upward, and behind the engine through the tractor.

Fig. 6: Second cylinder

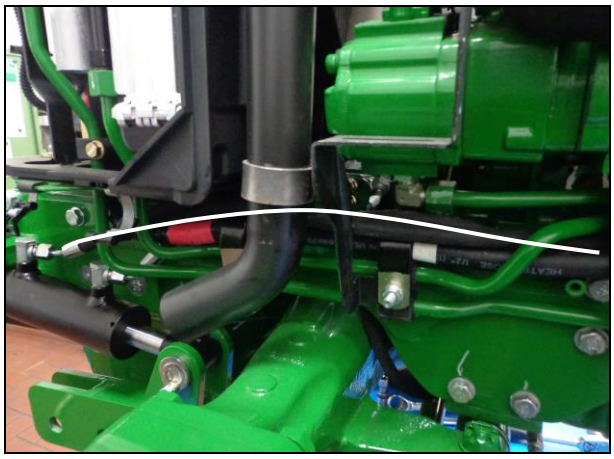

Fig. 7: Hose routing – second cylinder

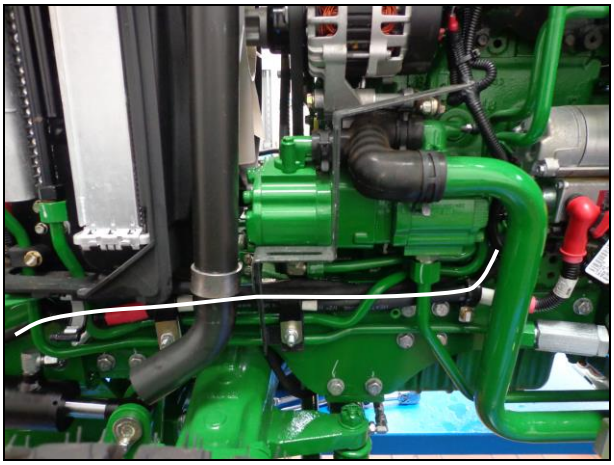

Fig. 8: Hose routing – second cylinder

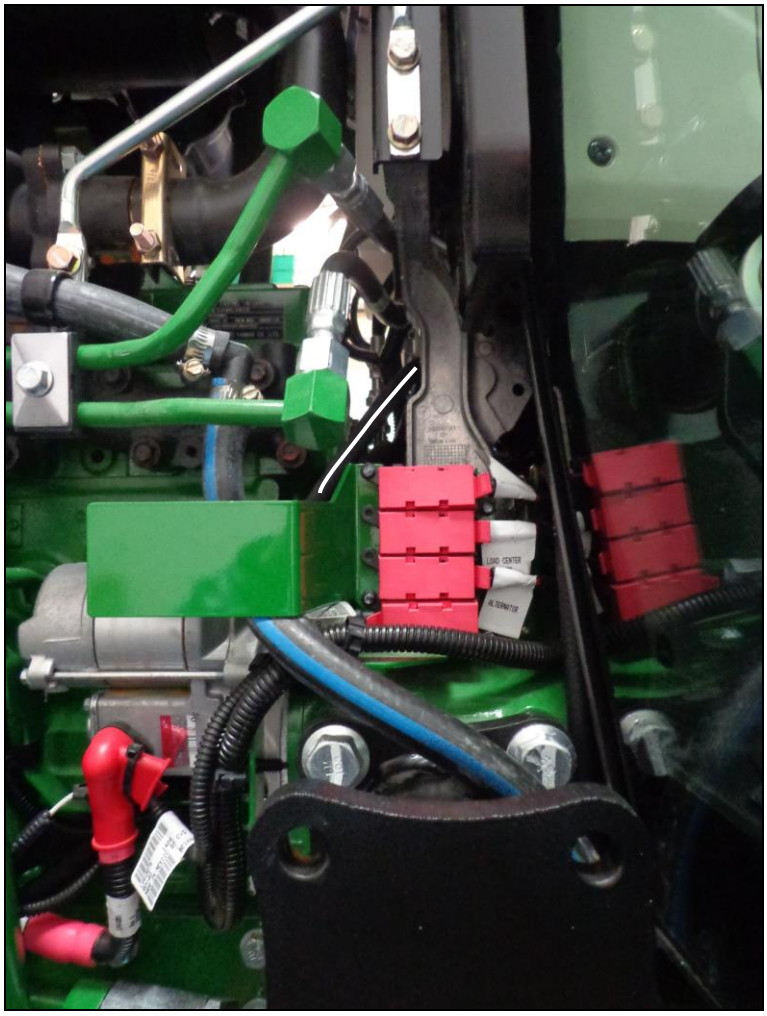

Fig. 9: Pull behind the engine and through to the other side

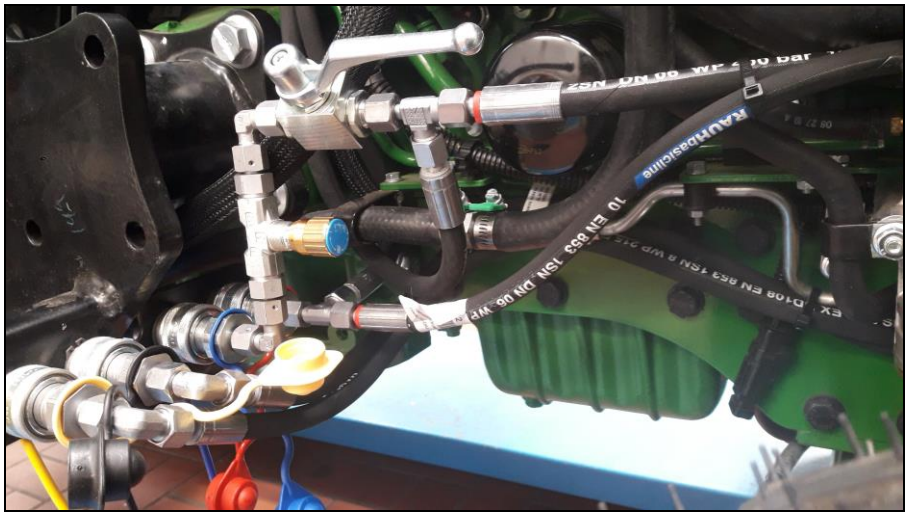

Fig. 10: Connection on the junction

Route hoses behind the fuel filter to the cylinder, attach hoses for the front hydraulic couplings, if present, with the enclosed clamp.

Figure 1: Hose guide right cylinder

9. Now screw the top link holder and the towing eye (with the help of the adapter plate) to the front frame.

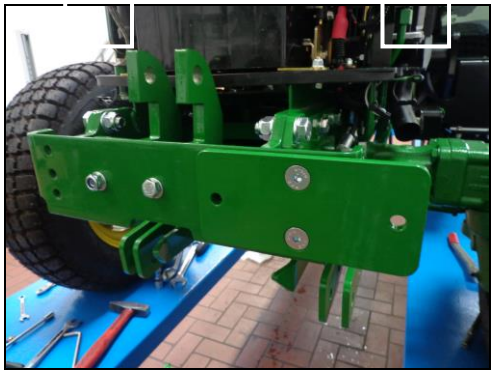

Fig. 11: Top link, adapter plate

Fig. 12: Hitch

Note!
There are two different top link holders!

The top link holder variant 1 does not have an attachment point for Cat 1, however an older version of front power system without offset front power system strut can also be used.

The top link holder variant 2 has attachment points for Cat. 0 and Cat. 1, however only the front power system H165 with offset strut can be used.

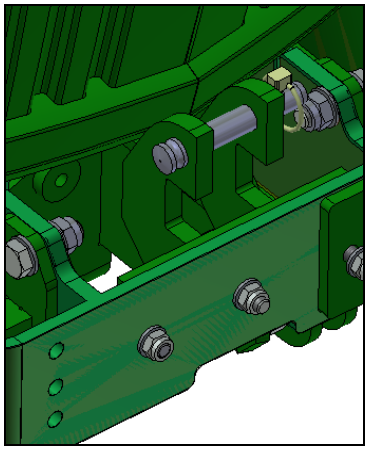

Fig. 13: Top link holder variante1

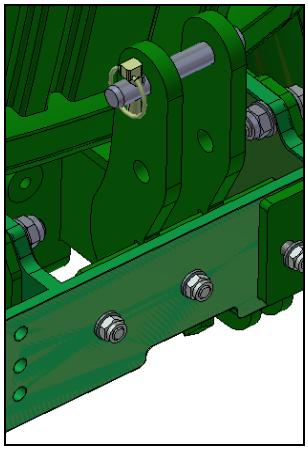

Fig 14: Top link variant 2

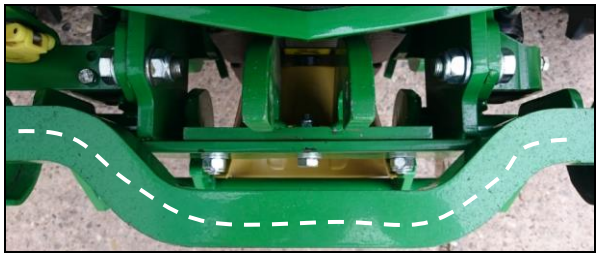

Fig. 15: Front power strut, offset

3.2 Mounting the lift arms

The lift arms, the coupling support, and the upper link must always be removed for operation with front power system, regardless of whether you are using an engine PTO shaft or a PTO drive shaft. To remove the lift arms, you must remove the fastening screw and the bolt.

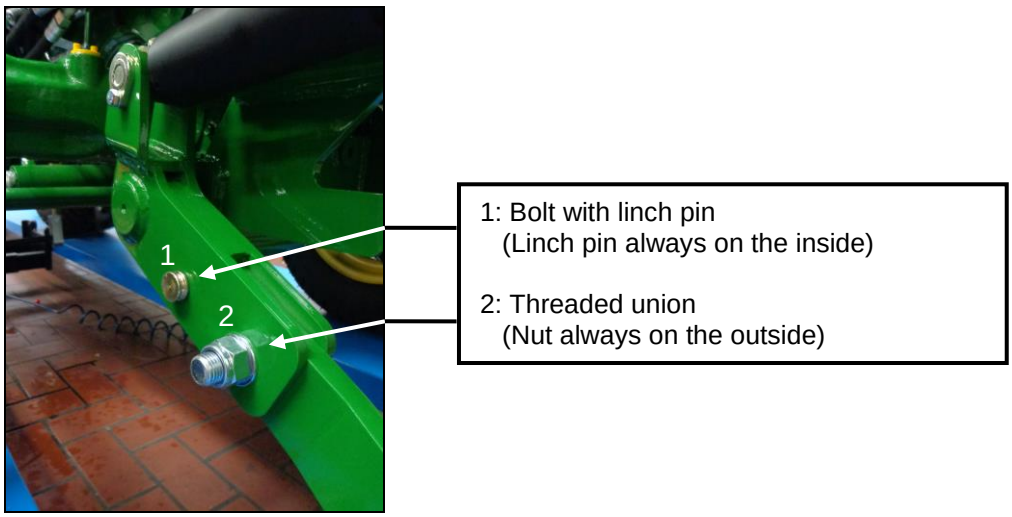

Fig. 16: Fastening – lift arms

3.3 Mounting the hydraulic extension kit

For tractors without front protective grille, there are two variants, bolt the holder on the front power system (variant 1) or into the tractor frame (variant 2) and hook in the hydraulic muffs.

For tractors with front protective grille, the additional holder is not necessary. The holder is integrated in the front protective grille.

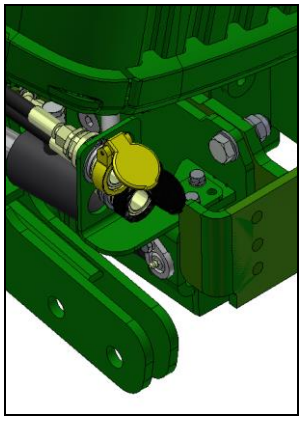

Fig. 17: Variant 1

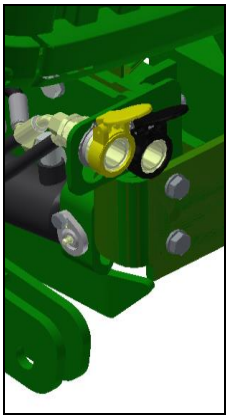

Fig 18: Variant 2

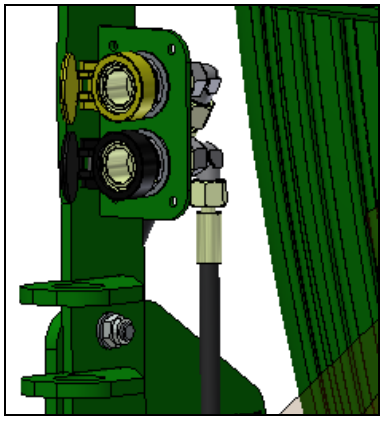

Fig 19: On the front protective grille

3.4 Mounting the front PTO shaft

Comply with the instructions provided by the manufacturer of the universal joint shaft!

3.4.1 Front PTO shaft, long version

1. Fasten the rear receptacle from the PTO drive shaft on the tractor frame, with 2 screws (M12x45, hexagon with collar) on both sides.

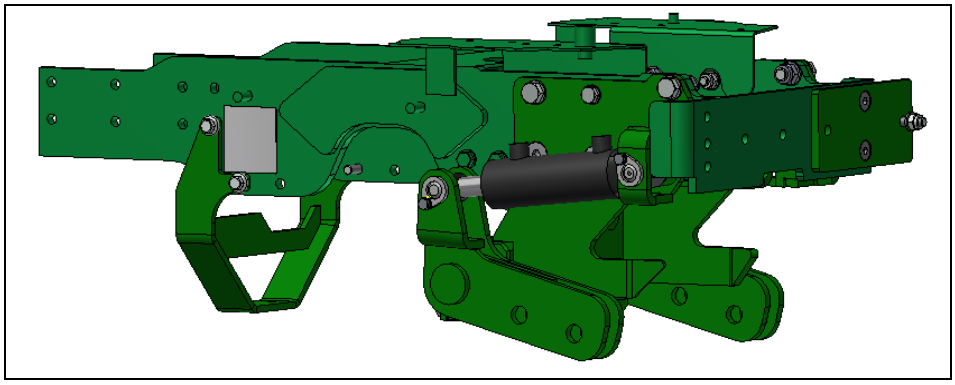

Fig. 20: Rear holder for drive shaft

2. Now, use the two plates on the rear holder, and on the front power system to clamp the drive shaft.

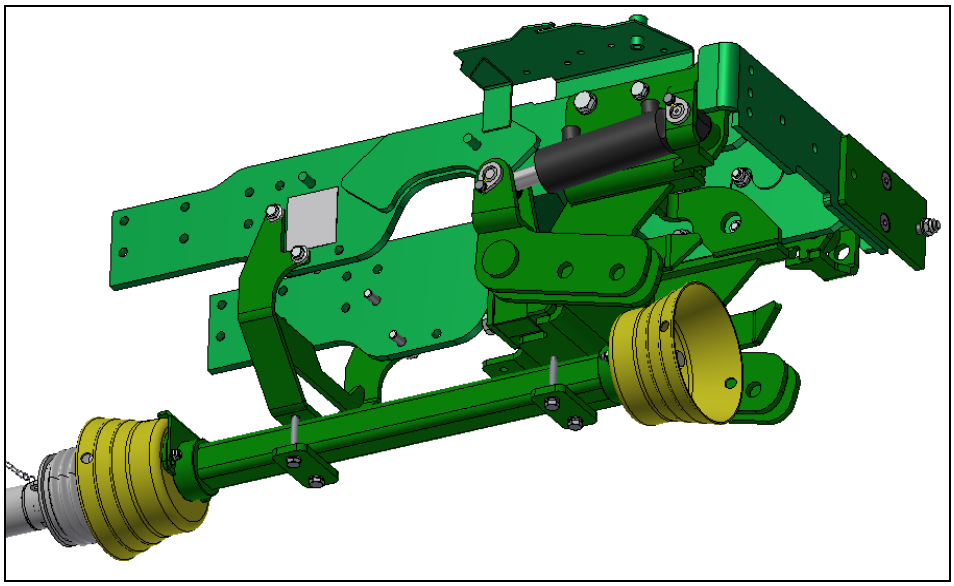

Fig. 21: Drive shaft mounted

To prevent switch-off of the front PTO shaft when reversing, a sensor from JD can be mounted on the holder. The sensor must be ordered from JD. (Order number: LVA17409 and LVA18264 are required for this) The hexagon profile is pushed onto the profile shaft and clamped via a threaded pin, and it serves as a signal transducer for the sensor.

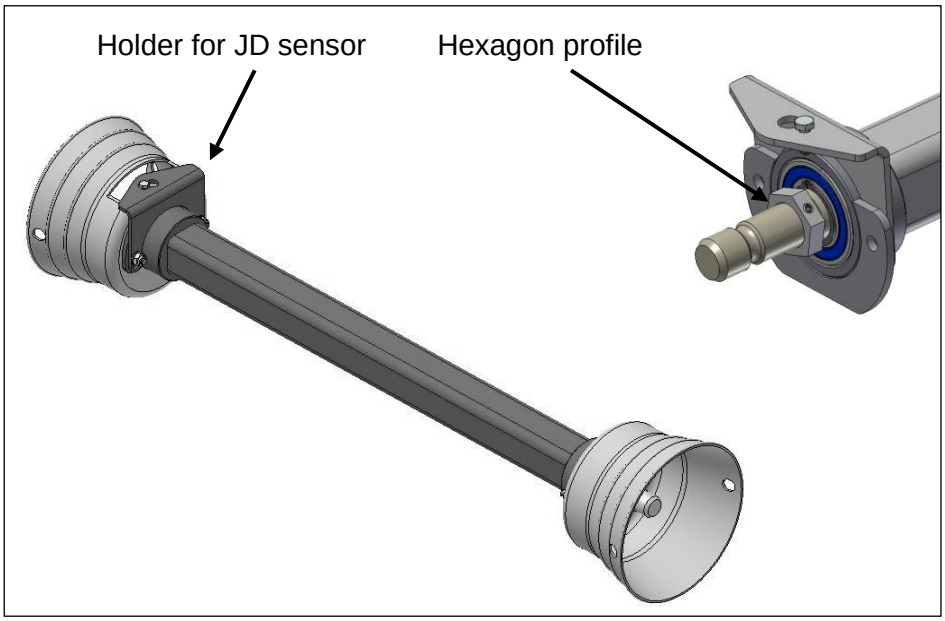

Fig. 22: Drive shaft

3.4.2 Front PTO shaft, short version

1. Mount the holder on the mid-mount stub, cut out the protective pipe accordingly.

Fig. 23: Holder – mid-mount stub

Fig. 24: Cutout on the protective pipe

Fig. 25: Guard, assembled

2. Mount drive shaft + holder on the front power system as shown in the Fig.

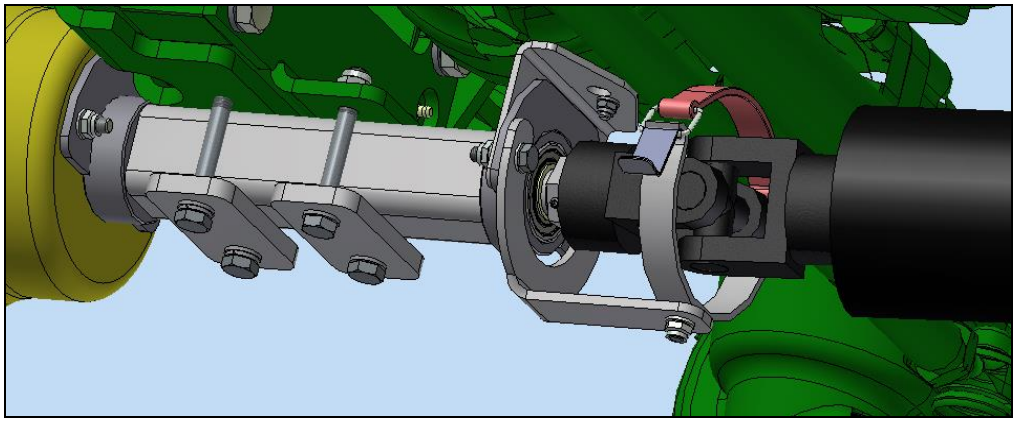

Fig. 26: Drive shaft mounted

3. Mount universal joint shaft and position the two protective pipes, and clamp both pipe ends using a shaped clamp band for each protective pipe.

Fig. 27: Protective pipes mounted

3.5 Frame trussing

1. Mount holder on tractor housing, tension and counter screws against tractor housing.

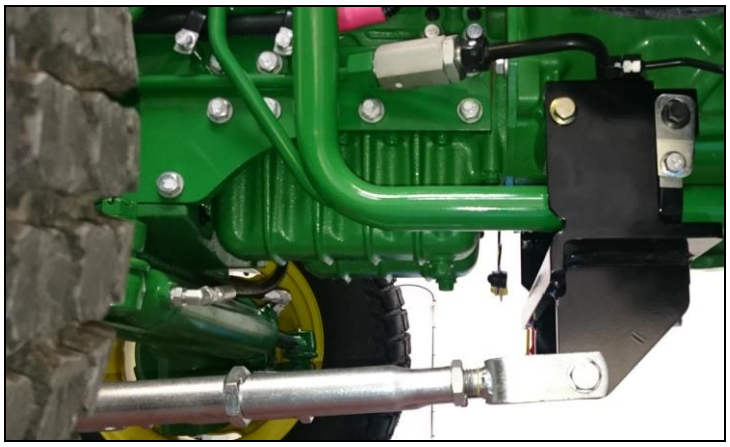

Fig. 28: Holder on the tractor frame

Fig. 29: Clamp screws onto the frame

2. Screw holder onto the front power system, hook in and brace pull rods.

Fig. 30: Fasten frame trussing on the front power system

3.6 Pressure accumulator

Mount the pressure accumulator + retaining bracket as shown on the Fig. and connect hydraulically with the T-piece in front of the throttle.

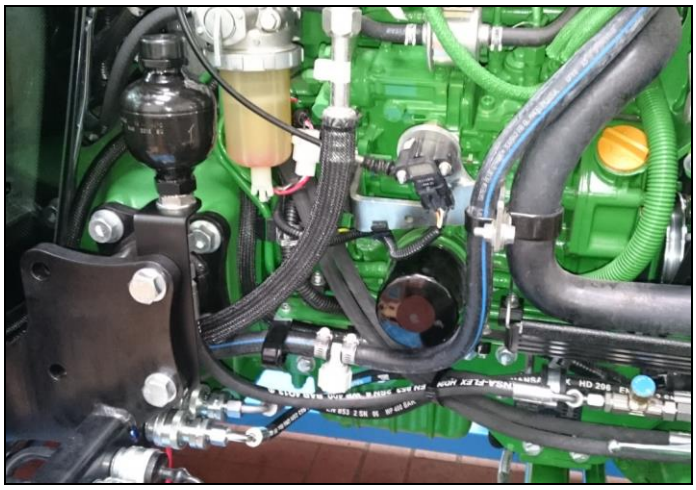

Fig. 31: Pressure accumulator mounted

3.7 Rear hydraulics extension kit

For 3R tractors with or without cab, there is a separate hydraulics extension kit with accompanying installation manual.

3.8 Lay-out rear hydraulic lines from rear to front

The two hoses are connected left rear on the hydraulic muffs of the existing valve, and pulled under the tractor to left front.

Fig. 32: Valve, left rear

For tractors without front protective grille, the support plate is fastened and the hydraulic muffs are mounted as shown in the Fig. (2x angle bracket threaded unions are dispensed with)

For tractors with front protective grille the support plate is dispensed with, the hydraulic muffs are mounted on the insertion points in the front protective grille.

Fig. 33: Hydraulic connections, left front

3.9 Hose holder

The hose holder is mounted on the right side (in the direction of travel) under the running board. (See Fig.)

For tractors with cab, a single or double hose holder is available.

For tractors without, cab only the single hose holder is possible.

Fig. 34: For tractor with cab

Fig. 35: For tractor without cab

3.10 Automotive traction drive

For automotive traction drive a separate installation manual is provided!

4 Operation

Attention!
Before starting up the implement, read the instructions on safety and handling for operation of the entire implement and connection to the tractor.

4.1 Coupling triangle

Attention!

Incorrect installation oft the coupling triangle has the risk that the upper handlebar can push in the hood. Please observe when setting the coupling triangle the following pictures.

On the four images the four theoretically mounting positions of the coupling triangle are shown. The top link is on all four pictures completely screwed together to show the extreme situation.

The mounting positions A and B on this page are designed fort he mounting of the coupling triangle. The possibility of displacing the the top link two not recommend mounting positions are possible, mounting position C and D on the following page.

- Mounting position A: Can be used and is designed for a low mounting height of the attachment
- Mounting position B: Can be used and is designed for a higher mounting height of the attachment

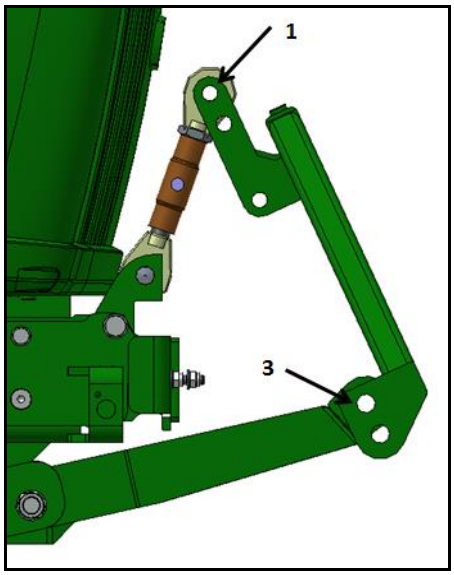

Fig. 36: mounting position A

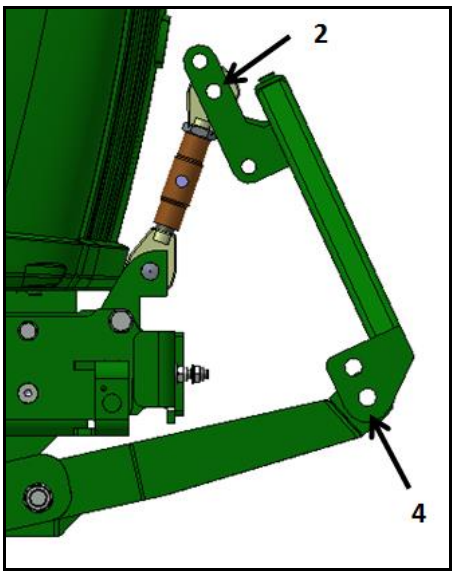

Fig. 37. Mounting position B

- Mounting position C: Can be used, to adjust the attachment mounting position A is the preffered one.

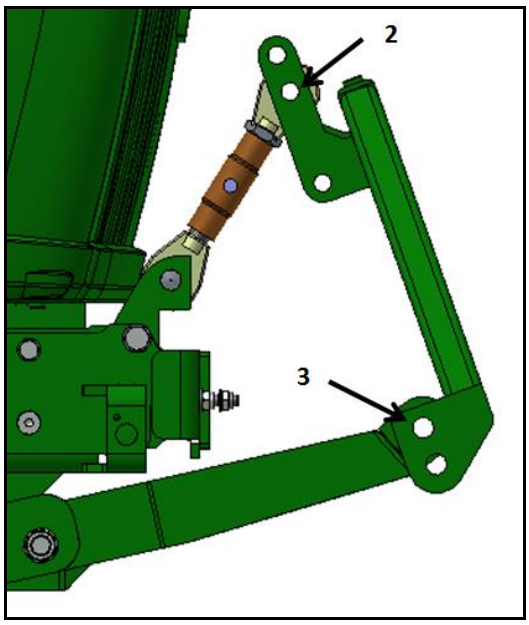

Fig. 38: mounting position C

- Mounting position D: Should **not be used**, there is a hight risk when the top link is screwed together all the way that the, top link runs into the hood..

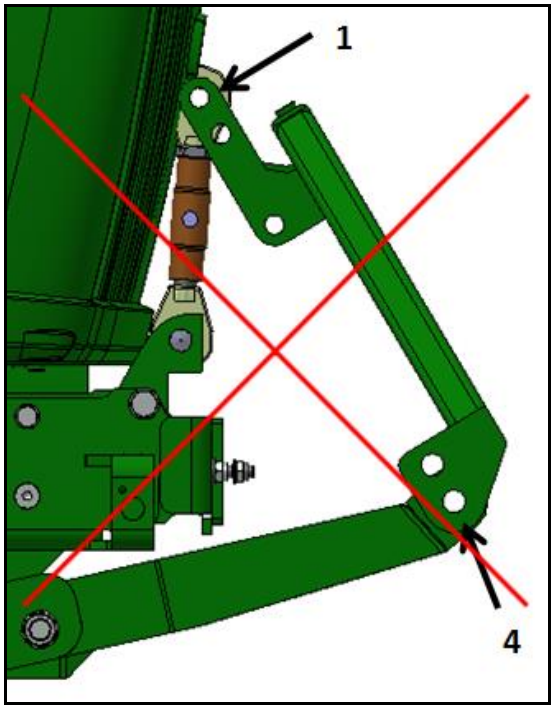

Fig. 39: mounting position D

4.2 Coupling and uncoupling implements

Note!
Comply with the axle loads specified by the tractor manufacturer

1. Drive the tractor forward in front of the implement.
2. Lower the front power system hydraulically.
3. Drive slowly toward the implement until the coupling triangle of the tractor is under the coupling triangle of the implement.
4. Slowly lift the front power system until the implement is slightly lifted.
5. Secure the implement with the appropriate triangle locking mechanism. The triangle locking mechanism depends on the type of implement.

4.3 Lowering safeguard for the front power system

Note!
Use the lowering safeguard for:
– Road travel
– Driving between work locations
– Cleaning and maintenance tasks

1. Lift the front power system.
2. Activate the stop valve by pulling it out and swinging it 90 degrees relative to the hydraulic lines.
   The lowering safeguard is now locked.

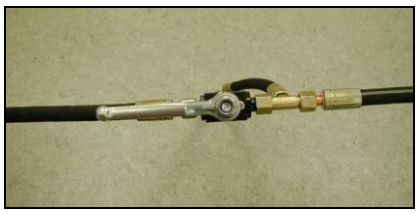

Fig. 40: Lowering safeguard, shown in unlocked position

Fig. 41: Lowering safeguard shown locked

Note!
Strictly avoid lowering the front power system via the tractor's control lever when the lowering safeguard is locked.
Otherwise parts of the front power system could be damaged!

5 Maintenance

5.2 General information

Attention!
Personal injury or damage to the tractor and the implements can occur.
Before each use, check all safety-relevant parts, the hydraulic connections, and all threaded unions.

5.3 Service

After 25 operating hours, at the start of the season, or after a longer standstill period:

Attention!
Danger of injury due to moving parts.
Remove the ignition key before performing maintenance tasks on the implement.

- Grease the moving parts of the device
- Grease the bearing of the bracket on the PTO shaft drive.
- Grease the lowering safeguard
- Grease the arrest bolt
- Check the seat, status and seal of the hydraulic lines
- Before and after each use check all threaded unions for firm seat and re-tighten them if necessary

5.4 Repair

If there are faults, problems, or other indications of malfunction, contact your sales consultant or contact the manufacturer directly:

matev GmbH
Nürnberger Str. 50
90579 Langenzenn
Tel. (switchboard): 09 101/90 87-0

Enter the article number and the VIN number here.

This information is on the type plate of the device.

Article number: :.....

Chassis number: :.....

6 Disposal

The implements must be disposed of in accordance with the applicable regulations of the municipality or the country.

Take the parts to the collection points for residual waste, special waste, or recycle them depending on material.

matev GmbH does not provide any disposal services.

7 Guarantee

The General Terms & Conditions of matev GmbH provide information on the guarantee conditions.

matev GmbH
Nürnberger Str. 50
90579 Langenzenn

8 Technical data

Front power systems FPS-JD 3R	Data
Hydraulic cylinder	Two double-acting cylinders arranged on the side
Lift force	Do not exceed the permissible axle loads of the vehicle!
Lift height	90 mm – 420 mm, on the coupling point of the lower arms
Distance in front of the axle	approx. 770 mm in work position
Coupling triangle	Can be removed for front power system attachment
Weight	71 kg

Front PTO shaft	Data
Weight	31 kg

9 List of illustrations

Fig. 1: Drill out the rear bores 7
Fig. 2: Position of the front power system 8
Fig. 3: Front power system bolted to frame 8
Fig. 4: Cylinder in installed status 9
Fig. 5: Hose assignment 9
Fig. 6: Second cylinder 10
Fig. 7: Hose routing – second cylinder 10
Fig. 8: Hose routing – second cylinder 10
Fig. 9: Pull behind the engine and through to the other side 11
Fig. 10: Connection on the junction 11
Fig. 11: Top link, adapter plate Fig. 12: Hitch 12
Fig. 13: Top link holder variante1 Fig 14: Top link variant 2 13
Fig. 15: Front power strut, offset 13
Fig. 16: Fastening – lift arms 14
Fig. 17: Variant 1 Fig 18: Variant 2 Fig 19: On the front protective grille 14
Fig. 20: Rear holder for drive shaft 15
Fig. 21: Drive shaft mounted 15
Fig. 22: Drive shaft 16
Fig. 23: Holder – mid-mount stub Fig. 24: Cutout on the protective pipe 16
Fig. 25: Guard, assembled 17
Fig. 26: Drive shaft mounted 17
Fig. 27: Protective pipes mounted 17
Fig. 28: Holder on the tractor frame 18
Fig. 29: Clamp screws onto the frame 18
Fig. 30: Fasten frame trussing on the front power system 18
Fig. 31: Pressure accumulator mounted 19
Fig. 32: Valve, left rear 19
Fig. 33: Hydraulic connections, left front 20
Fig. 34: For tractor with cab Fig. 35: For tractor without cab 20
Fig. 36: mounting position A Fig. 37. Mounting position B 21
Fig. 38: mounting position C 22
Fig. 39: mounting position D 22
Fig. 40: Lowering safeguard, shown in unlocked position 23
Fig. 41: Lowering safeguard shown locked 23

10 EC Declaration of Conformity

EC Declaration of Conformity for a machine to confirm compliance with the Machinery Directive 2006/42/EC and with the statutory regulations issued for the implementation of the Machinery Directive.

The manufacturer	matev GmbH Nürnberger Str. 50 90579 Langenzenn
declares that the machine	front power system and front PTO shaft FPS-JD – 3R series

complies with the provisions of the Machinery Directive 2006/42/EC and with the implementing national statutory regulations.

The signer is authorized to compile the technical documents.

The address is the address of the manufacturer.

Date / Signature	November 2015	
Name of signer		Georg Hemmerlein
Signer information		Managing Director